

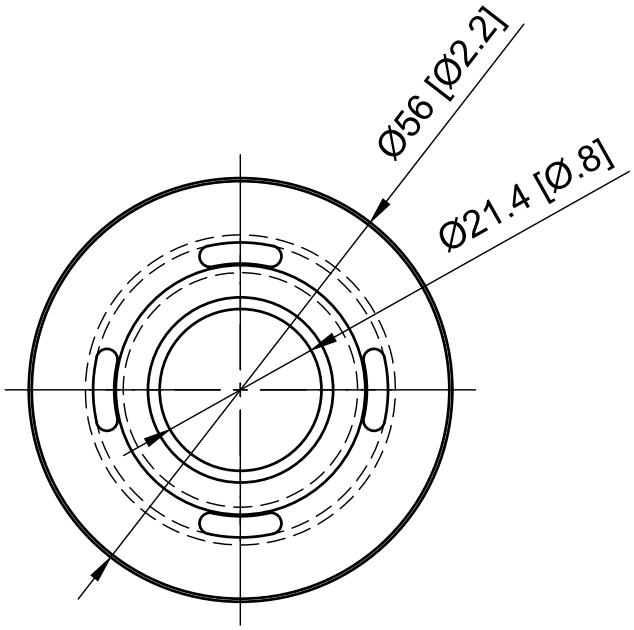

Product Code			
VAP	**PP**	**VV**	**1**
Valve Protection	Material PP black	Suitable for Adsorber series VV	Suitable for Adsorber size 1

All rights reserved
mm [in]

GIEBEL Adsorber®

www.giebel-adsorber.com
adsorber@giebel-group.com

Housing materials
PP

Total weight
0.003 kg / 0.01 lb

Title
Valve Protection
VV-1

Item No.
08.0020.00

Rev.	Date of issue	Sheet
B	17.11.2026	1/1