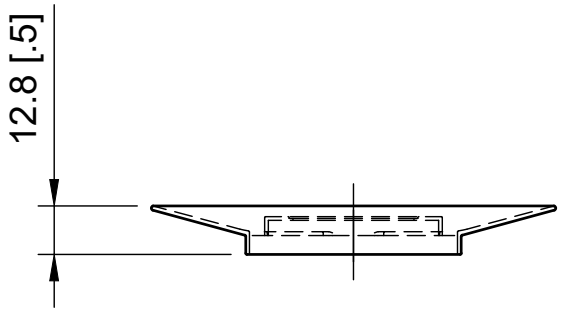

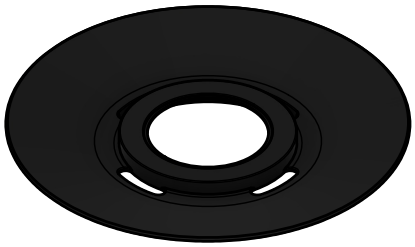

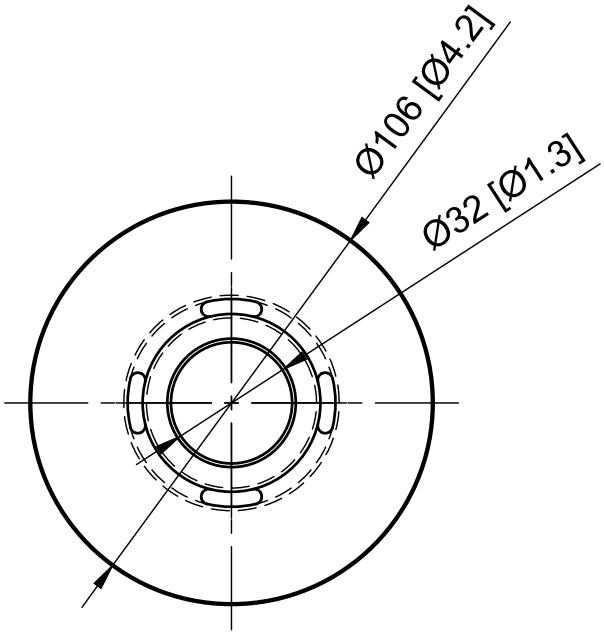

Product Code			
VAP	**PP**	**VV**	**3**
Valve Protection	Material PP black	Suitable for Adsorber series VV	Suitable for Adsorber size 3

All rights reserved

mm [in]

GIEBEL Adsorber®

www.giebel-adsorber.com
adsorber@giebel-group.com

Housing materials
PP

Total weight
0.01 kg / 0.02 lb

Title
Valve Protection
VV-3

VAP_PP_VV-3

Item No.
08.0020.02

Rev.	Date of issue	Sheet
B	17.11.2026	1/1